M38 - B0752 330 PCS

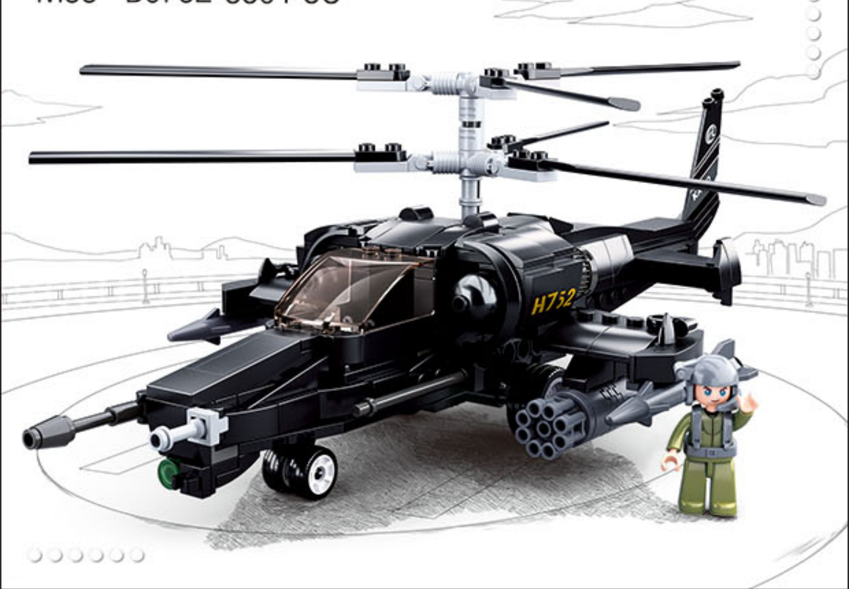

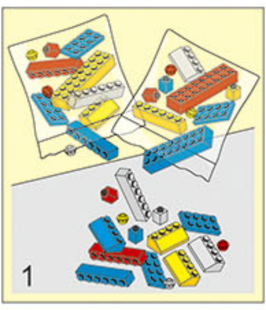

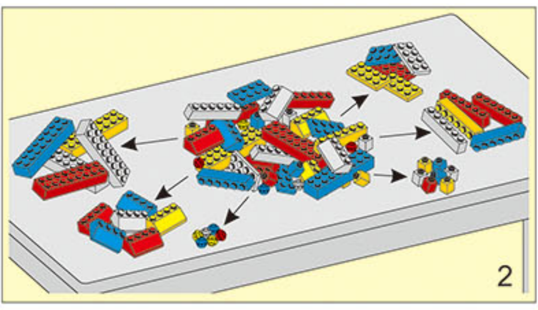

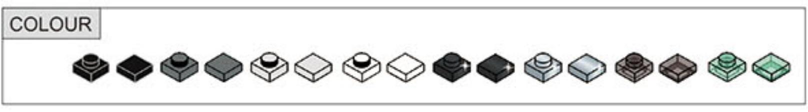

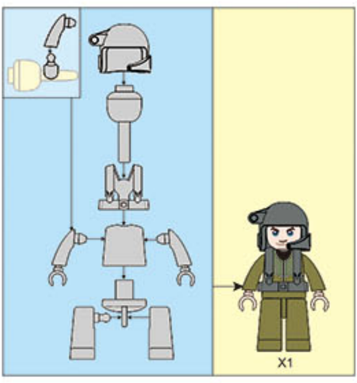

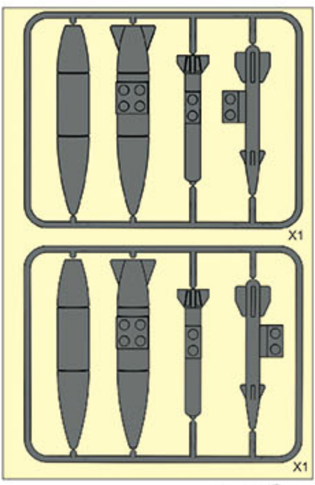

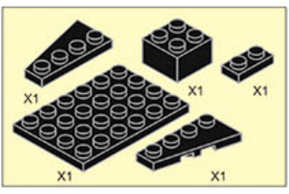
X1
X1
X1
X1
X1

1

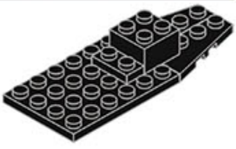

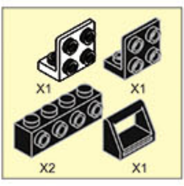

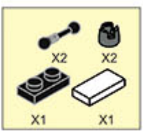

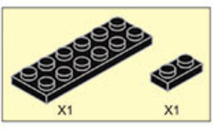

2

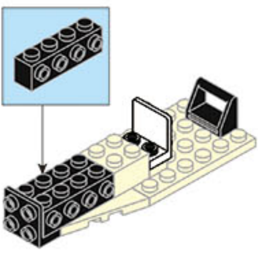

3

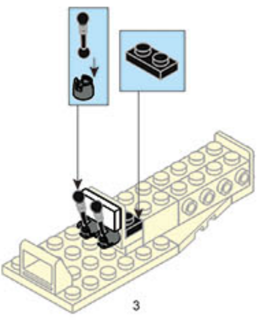

4

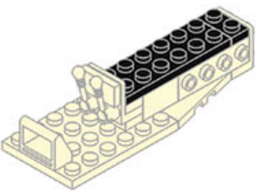

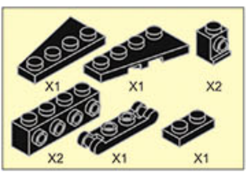
X1
X1
X2
X2
X1
X1

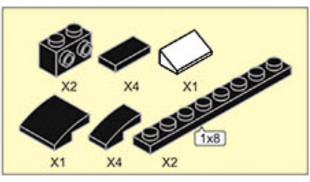
X2
X4
X1
X1
X4
X2
1x8

5

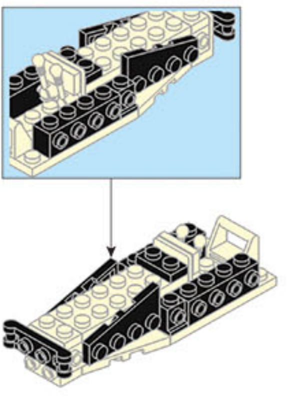

6

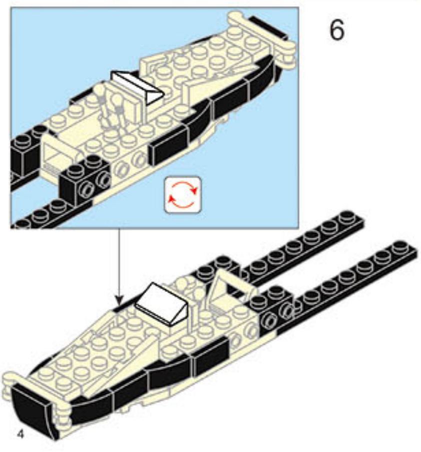

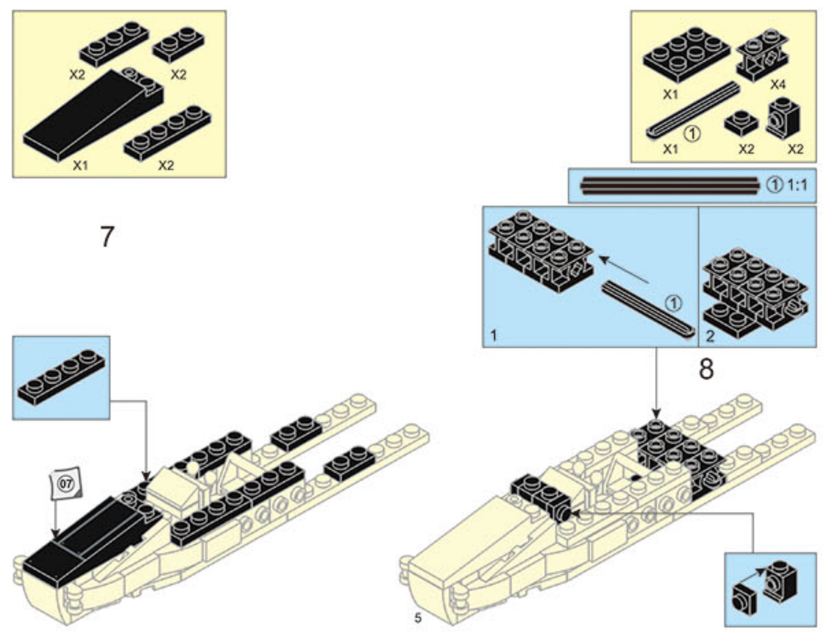
X2
X2
X1
X2
7
07
X1
X4
X1
①
X2
X2
① 1:1
1
①
2
8

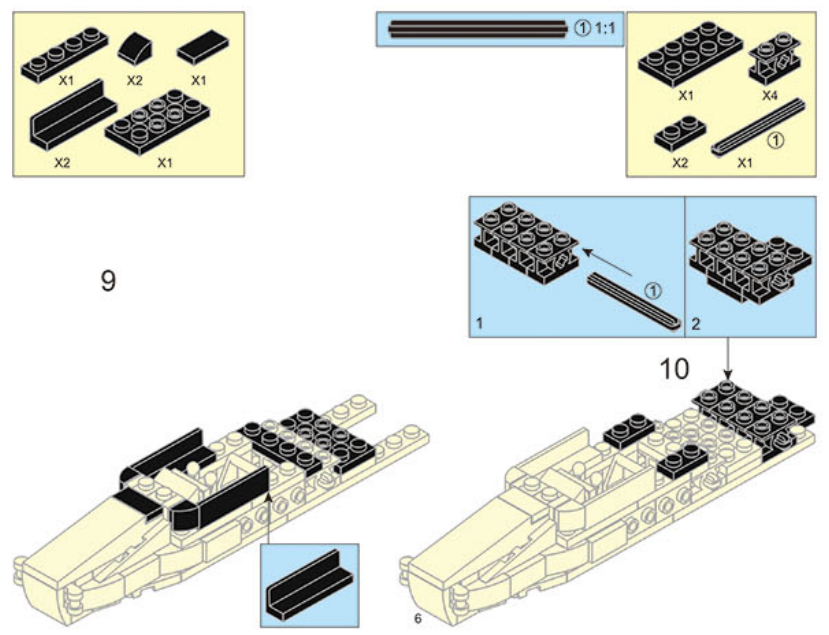
X1
X2
X1
X2
X1
9
① 1:1
X1
X4
X2
X1
1
①
2
10

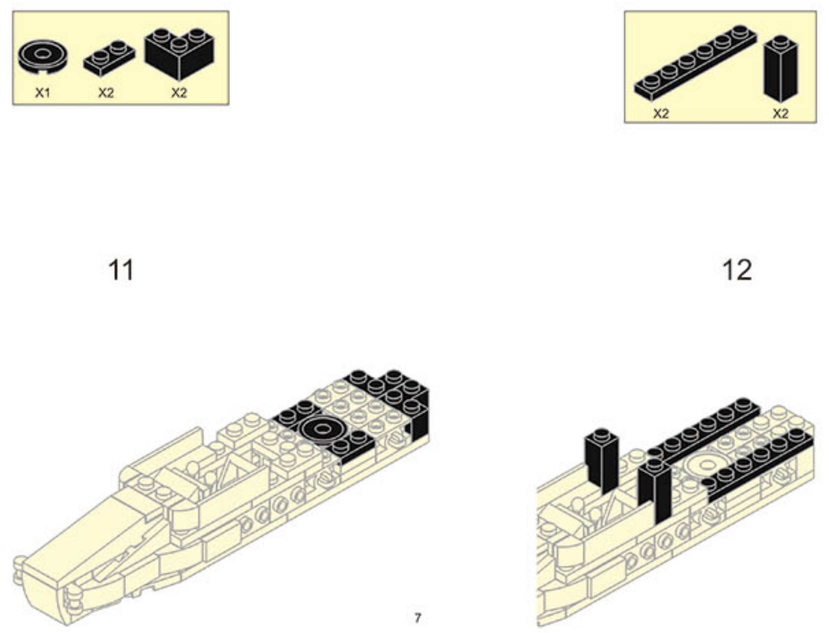
X1
X2
X2
X2
X2
11
12

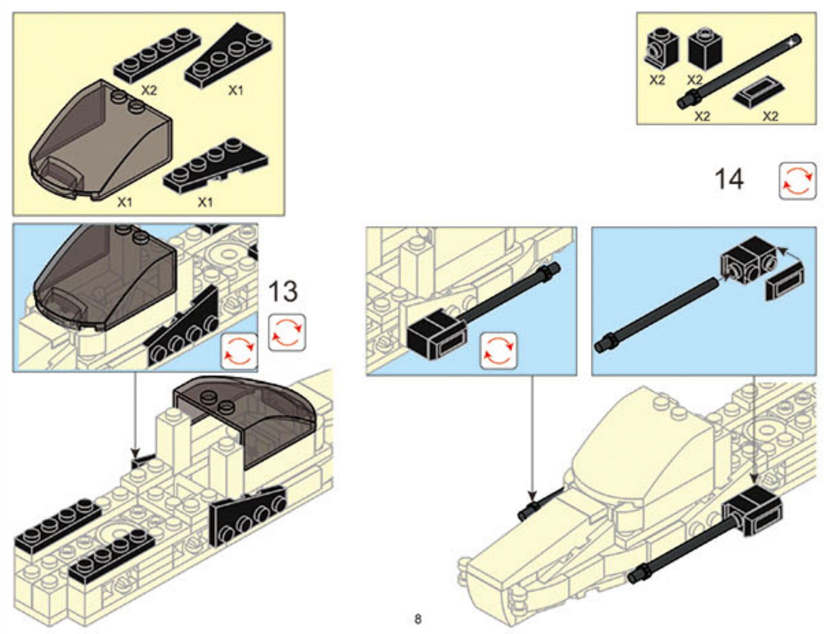
X2
X1
X1
X1
13
X2
X2
X2
X2
14

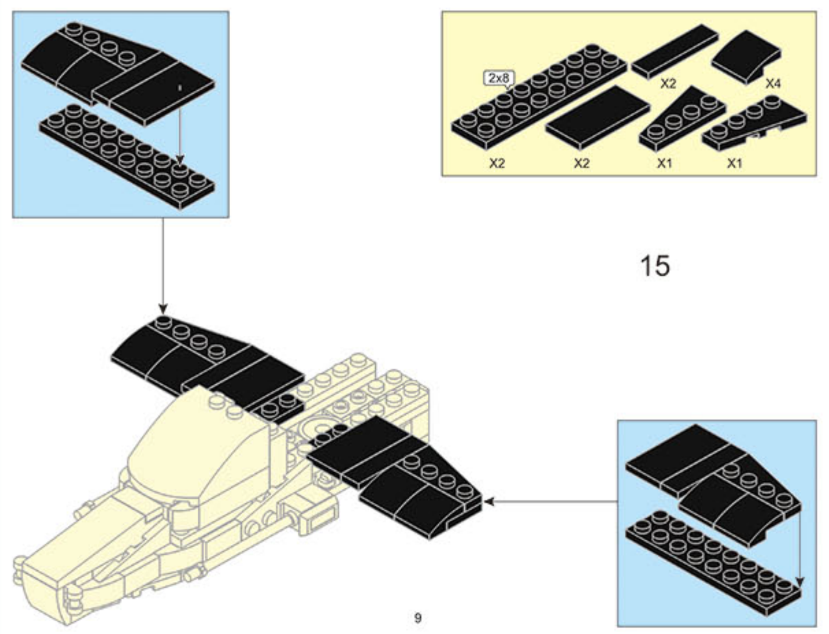
2x8
X2
X2
X4
X2
X1
X1
15

16

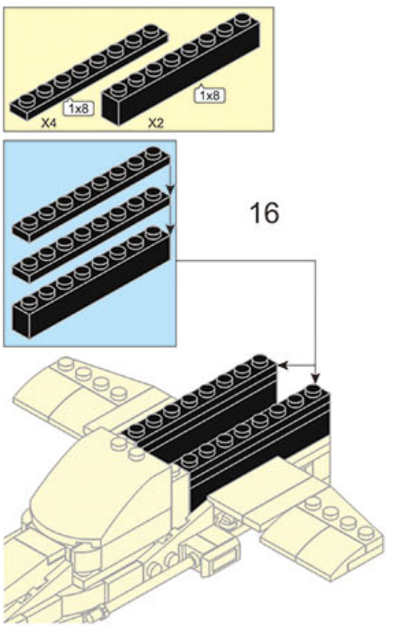
X4
1x8
X2
1x8

17

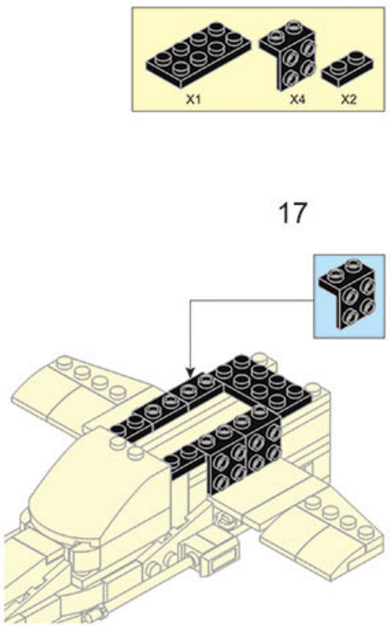

18

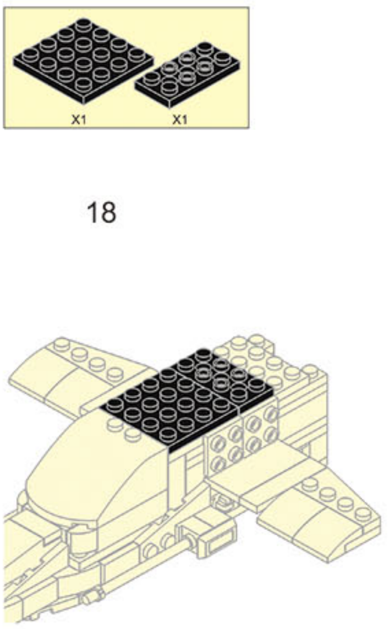

19

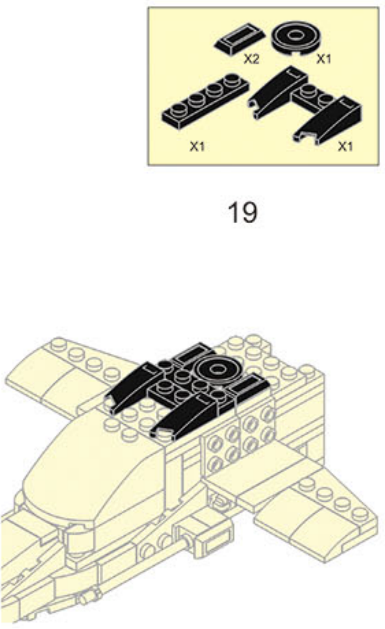

20

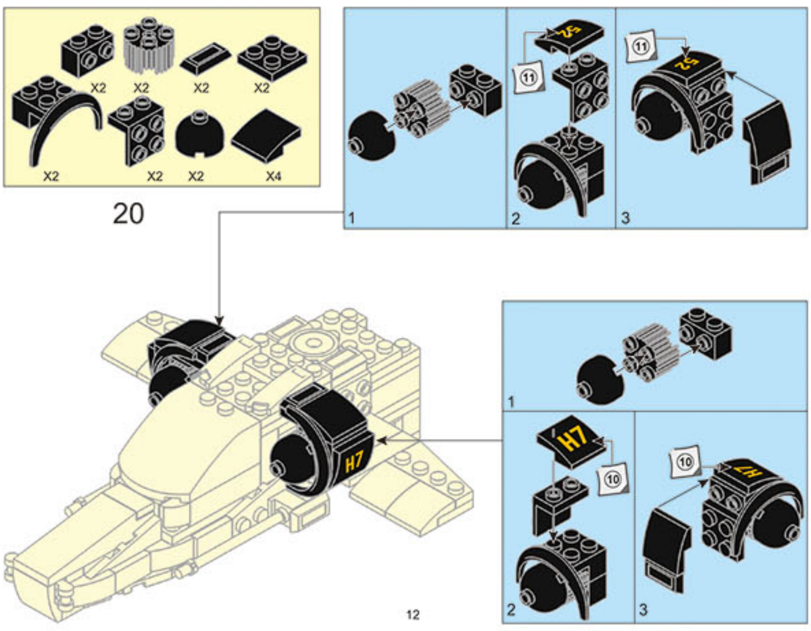
X2
X2
X2
X2
X2
X2
X2
X4
1
2
11
52
3
11
52
H7
1
2
H7
10
3
10
H7

21

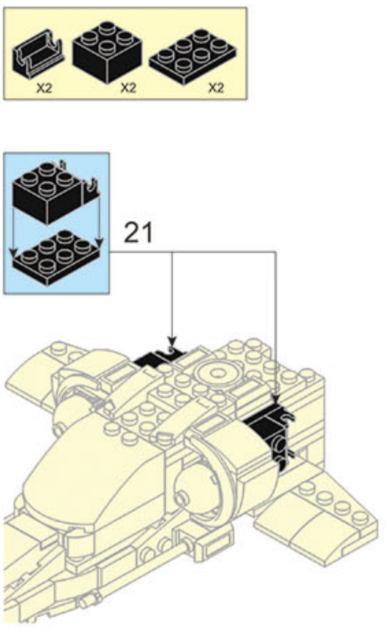

22

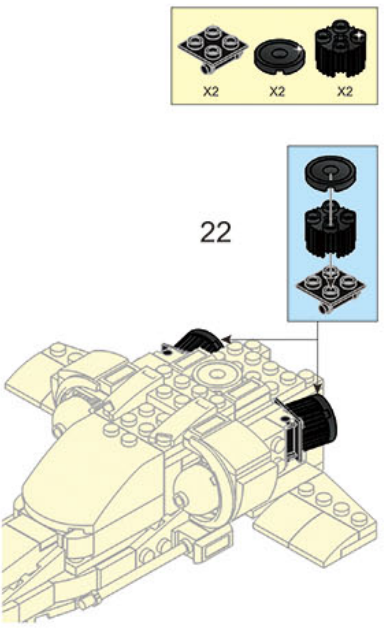

23

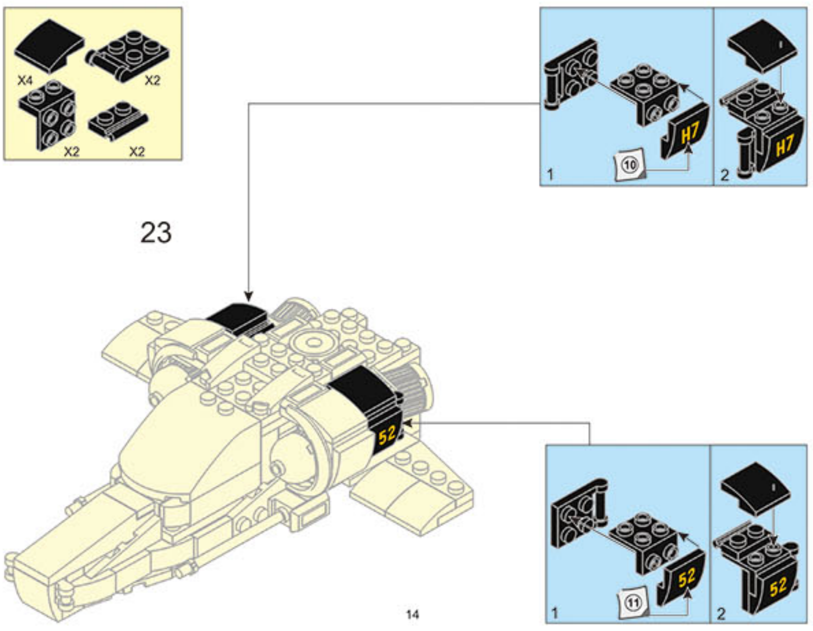
X4
X2
X2
X2
1
10
H7
2
H7
52
1
11
52
2
52

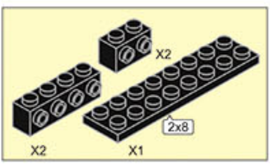

24

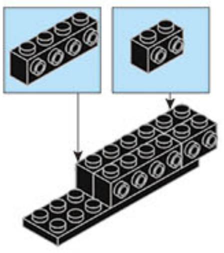

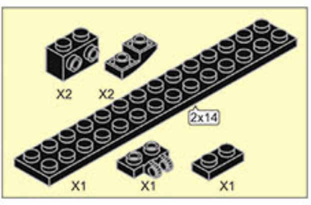
X2
X2
2x14
X1
X1
X1

25

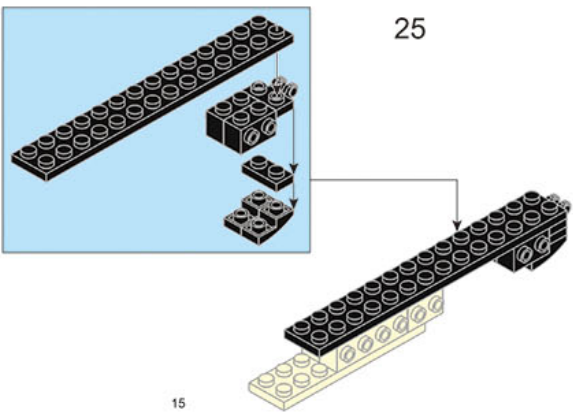

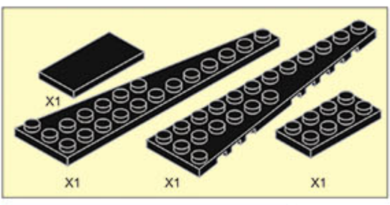

26

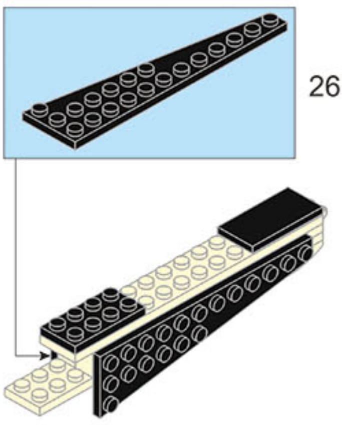

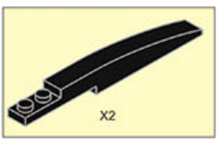

27

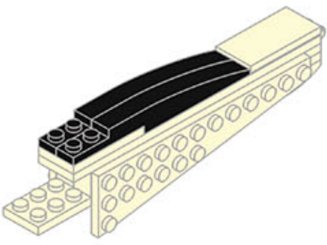

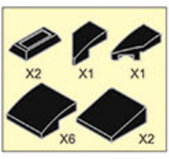
X2
X1
X1
X6
X2

28

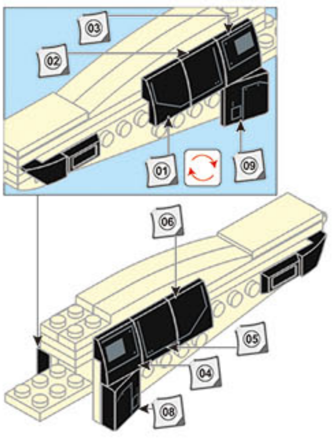
03
02
01
09
06
05
04
08

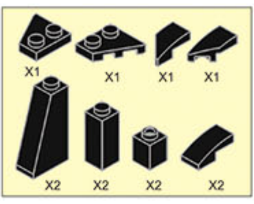
X1
X1
X1
X1
X2
X2
X2
X2

29

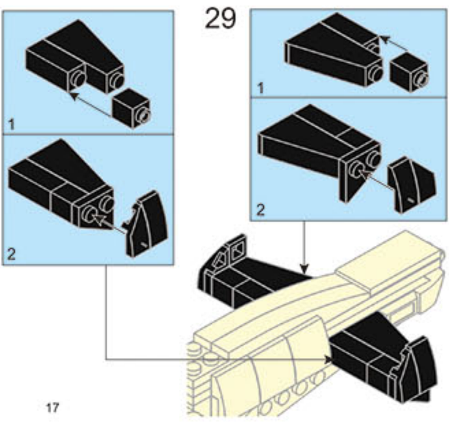

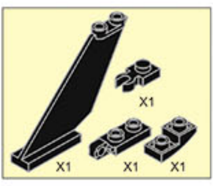

30

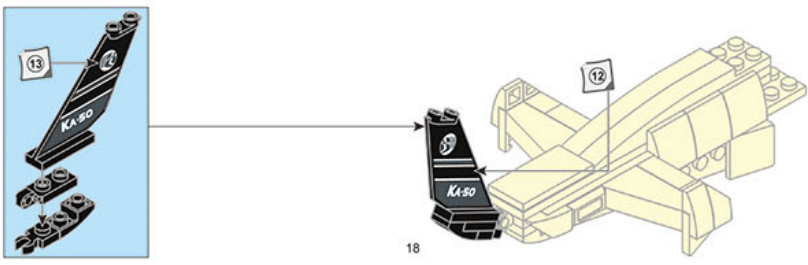
13
KA-50
12
KA-50

31

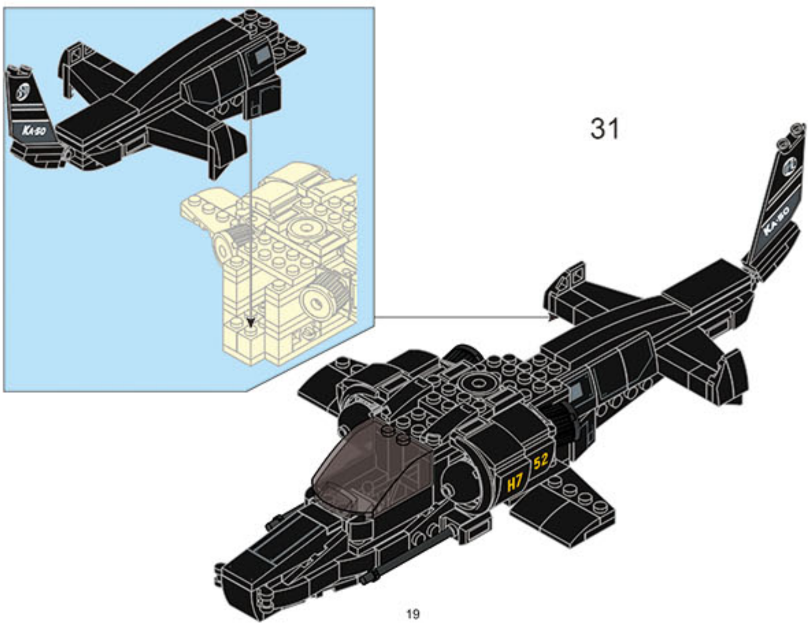
KA-50
KA-50
H7 52

32

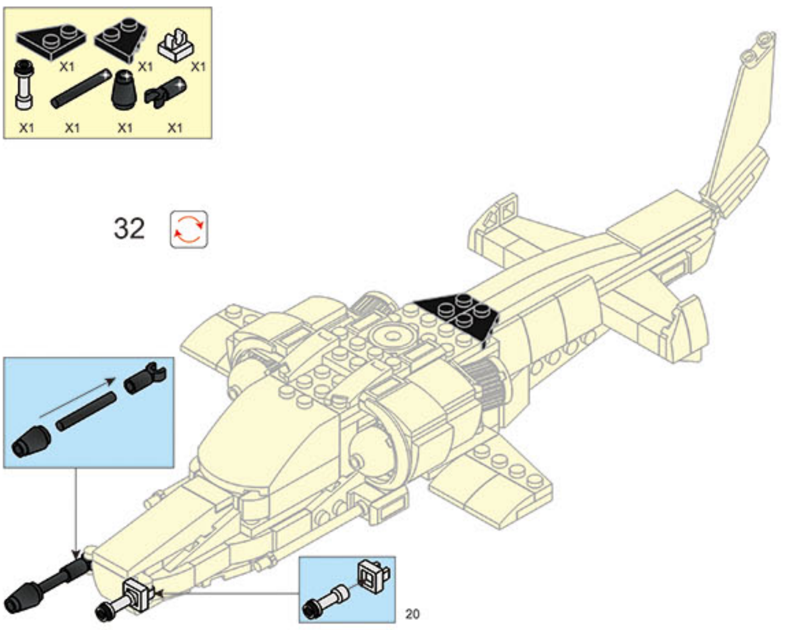
X1
X1
X1
X1
X1
X1
X1

33

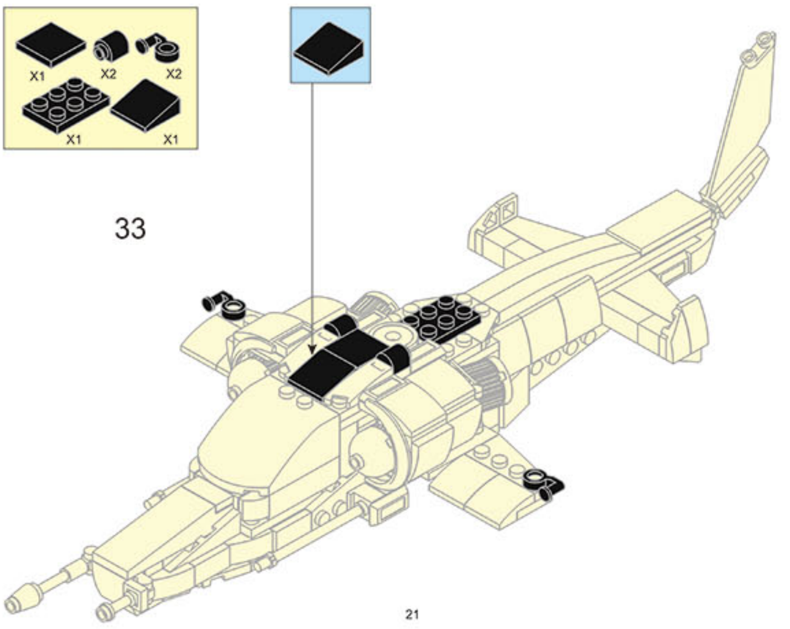
X1
X2
X2
X1
X1

34

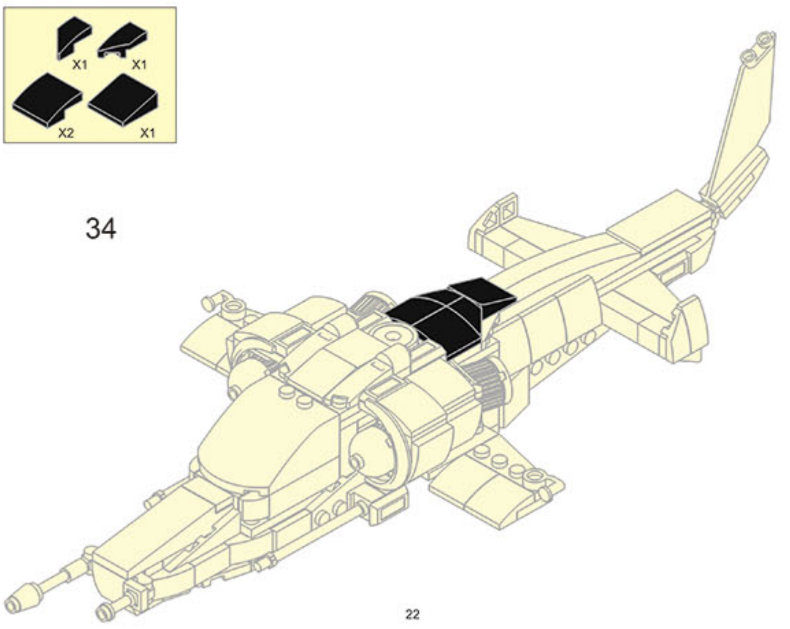

35

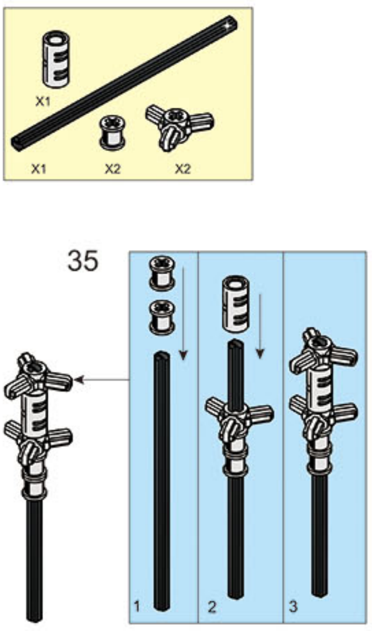
X1
X1
X2
X2
1
2
3

36

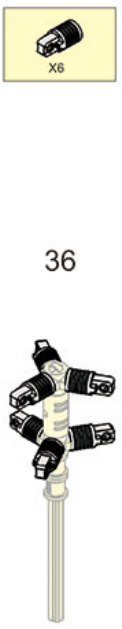

37

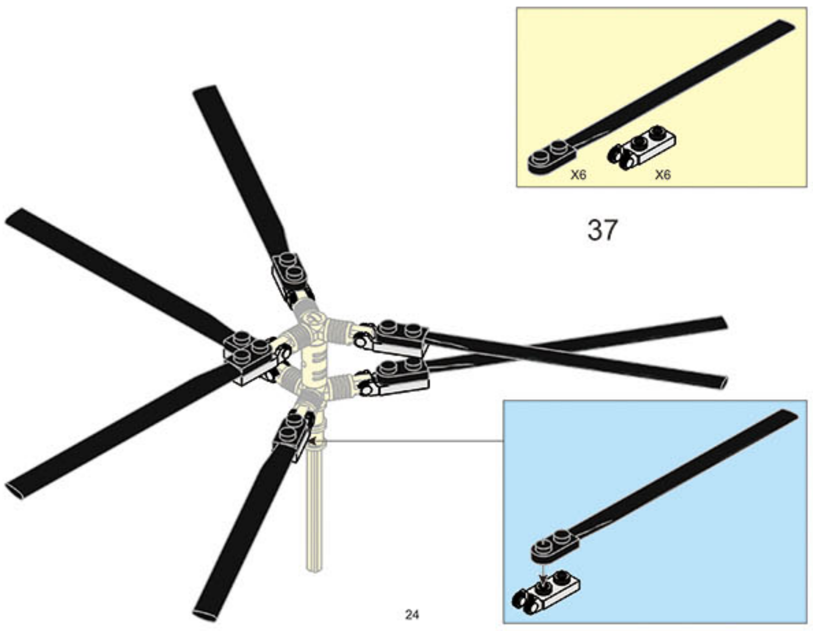

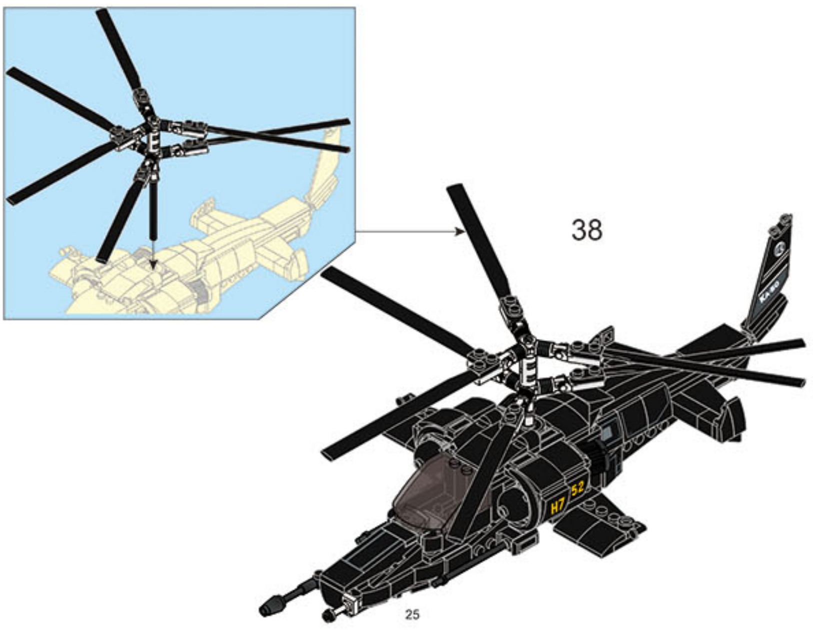

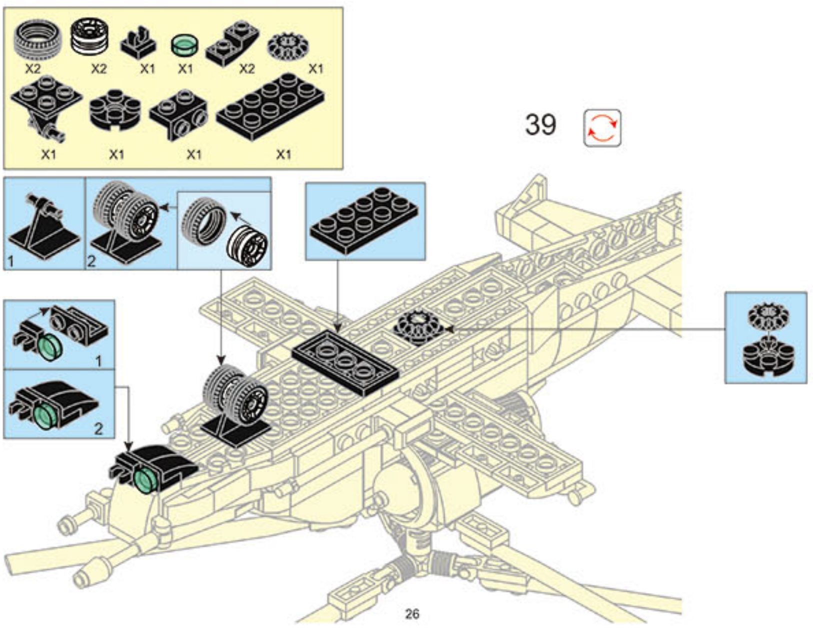
X2
X2
X1
X1
X2
X1
X1
X1
X1
X1
39
1
2
1
2

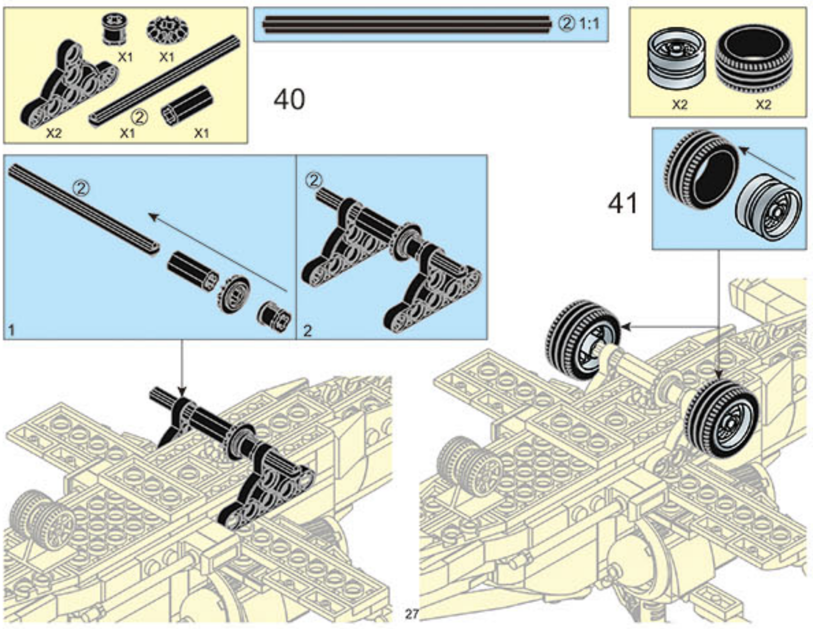
X1
X1
X2
②
X1
X1
② 1:1
X2
X2
40
41
②
1
②
2

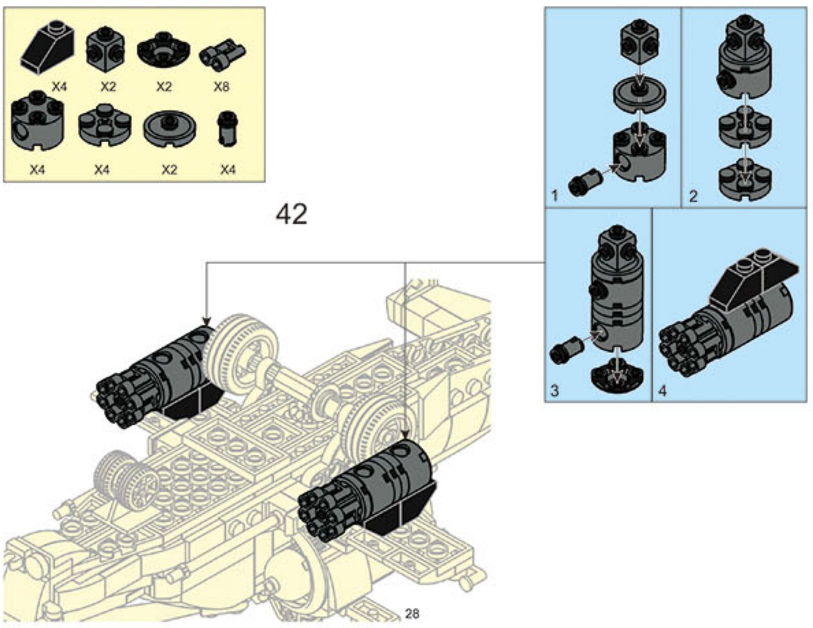
X4
X2
X2
X8
X4
X4
X2
X4
42
1
2
3
4

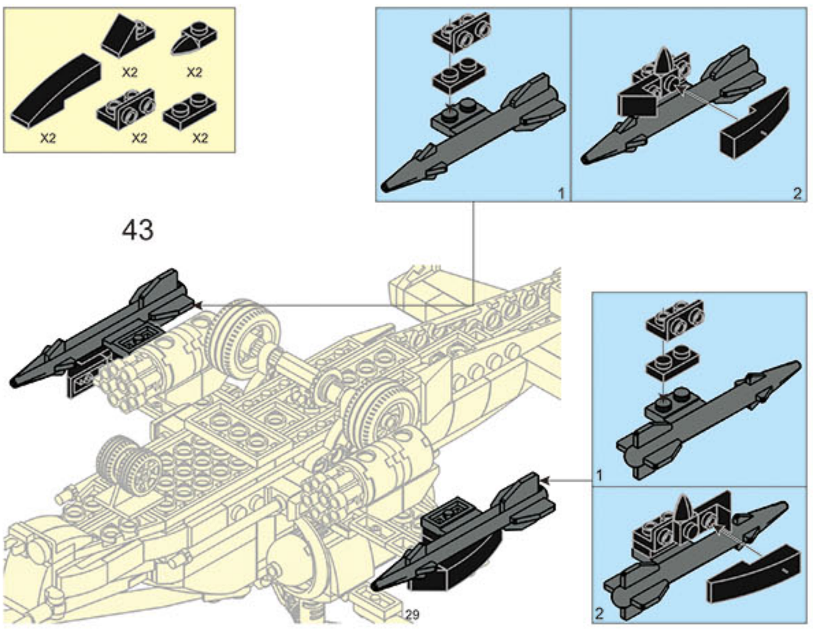
X2
X2
X2
X2
X2
43
1
2
1
2

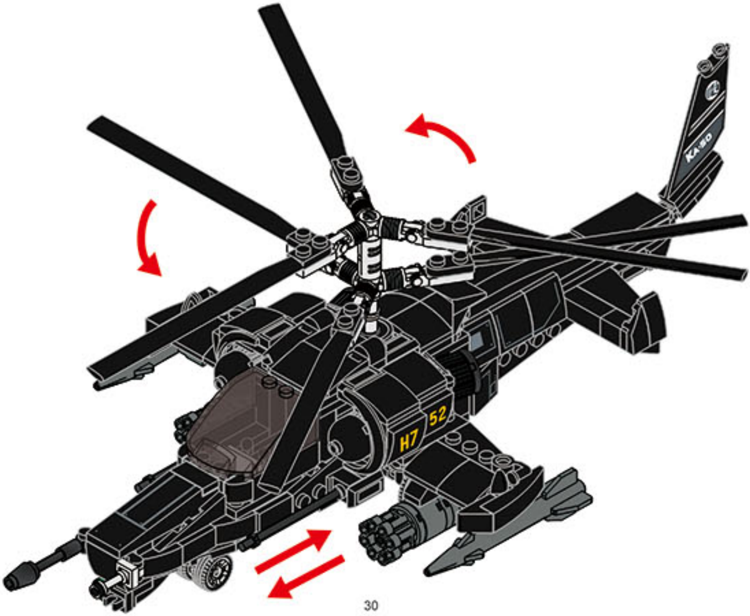

⚠ **WARNING:**
CHOKING HAZARD - Small parts.
Not for children under 3 years.