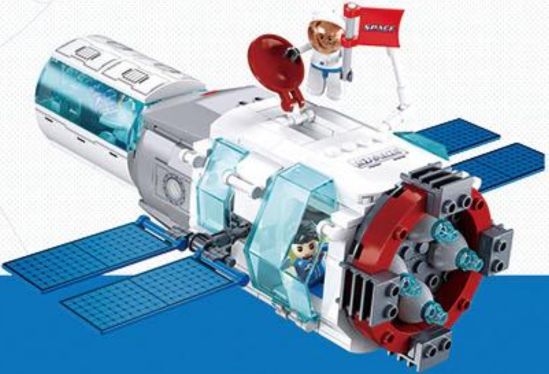

BOOK

M38 - B1198

Sluban

SPACE
B1198
B1201

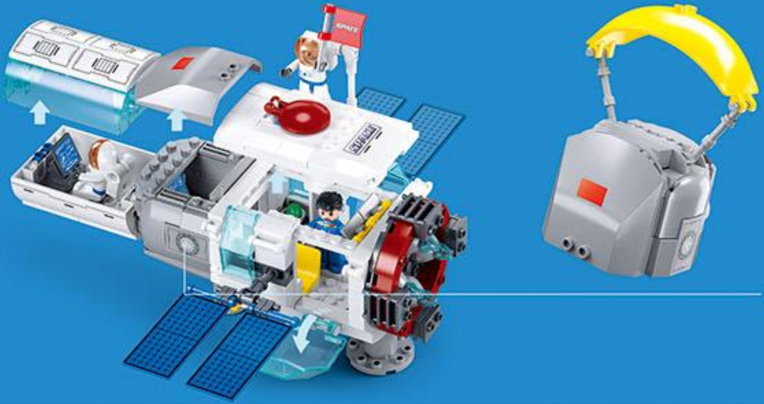

Skanna mig, läs historia 扫我，看故事

Scannen Sie mich, lesen Sie Geschichte

스캔 이야기를 읽다

تفحص لي قراءة القصة Skan meg. Les historie

Просканируйте меня,
прочитайте рассказ

スキャンミー 記事を読む

Scannez - moi, lisez l'histoire

Skannaa minut, lue tarina Analisa-me, lê a história

Scan me, Read Story

Scansionami, leggi la storia

Escaneame, lee la historia

Imbas Saya, Baca Cerita Scan mig, læs historie

01

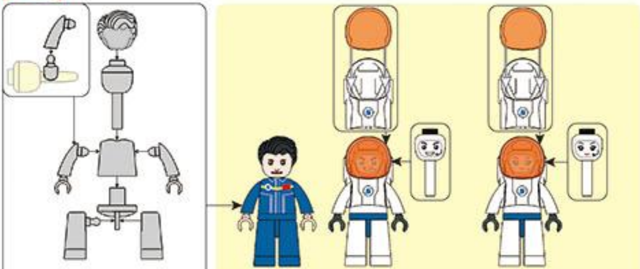

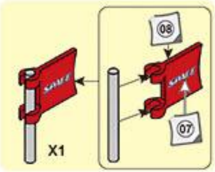

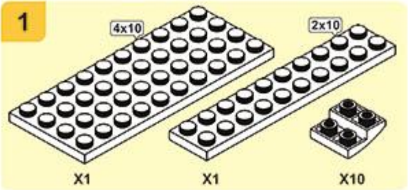
1
4x10
2x10
X1
X1
X10

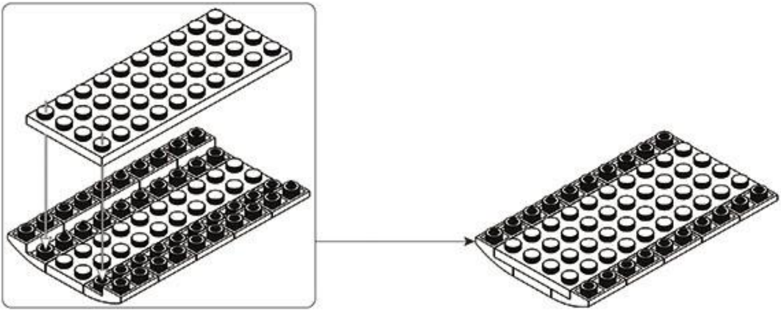

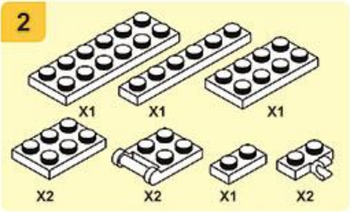
2
X1
X1
X1
X2
X2
X1
X2

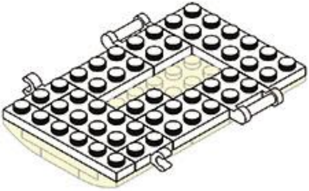

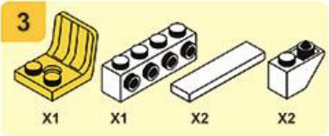

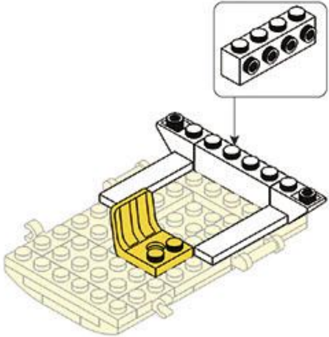

05

4

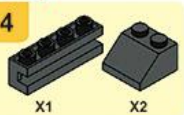

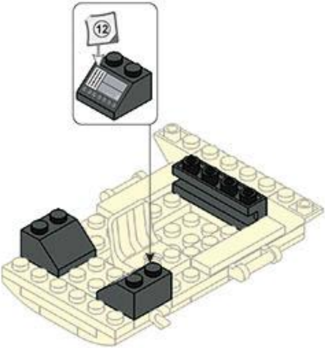

5

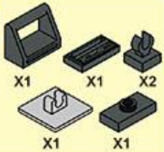
X1
X1
X2
X1
X1

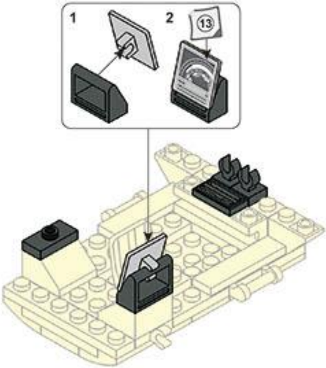

6

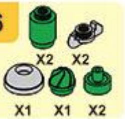
X2
X2
X1
X1
X2

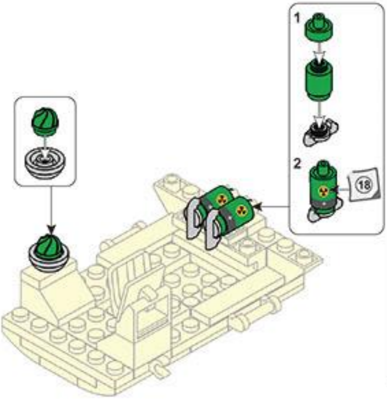

7

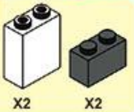

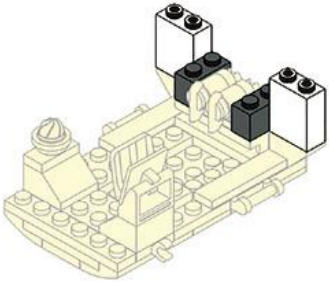

8

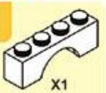

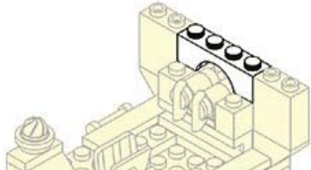

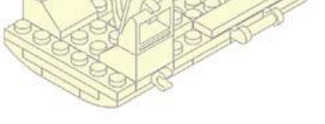

08

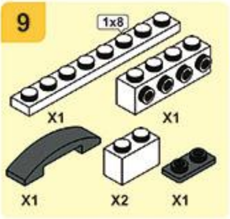
9
1x8
X1
X1
X1
X2
X1

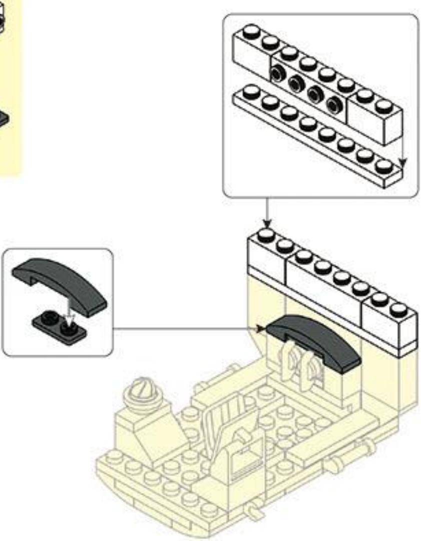

09

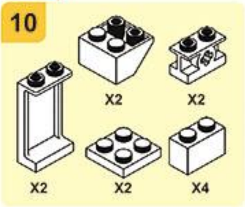
10
X2
X2
X2
X2
X4
X2

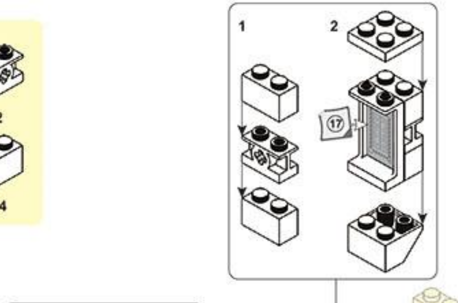

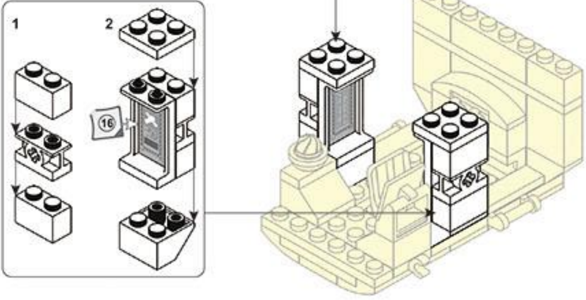

10

11

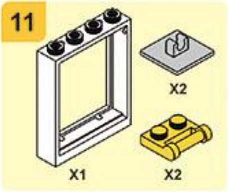

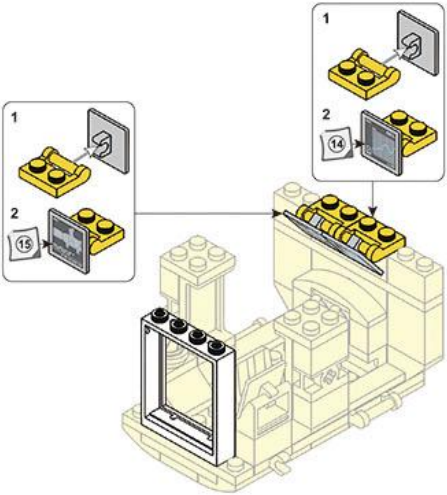

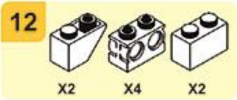

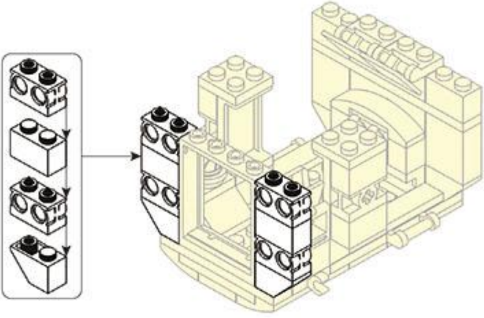

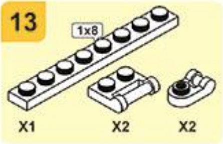
13
1x8
X1
X2
X2

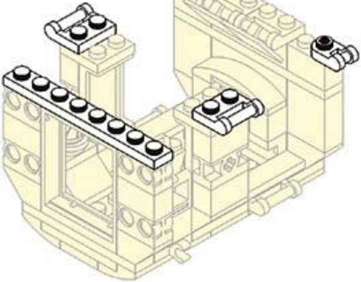

13

14

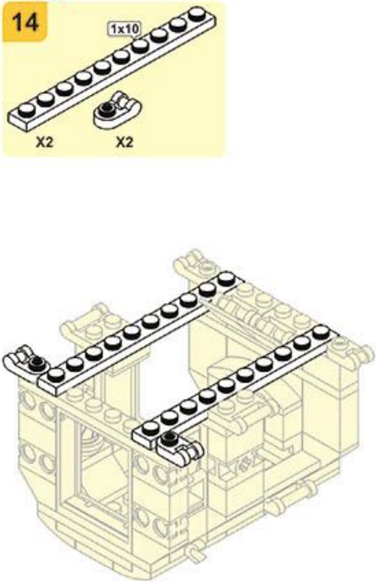

15

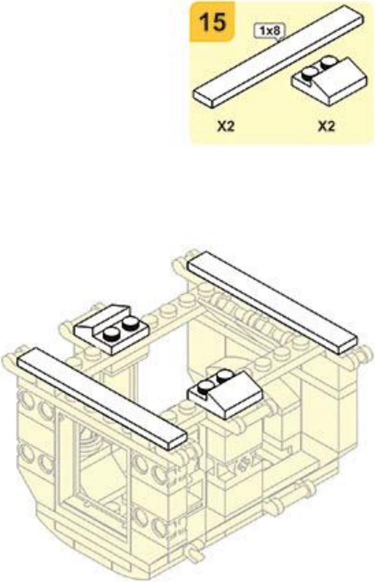

14

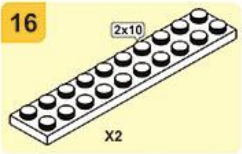

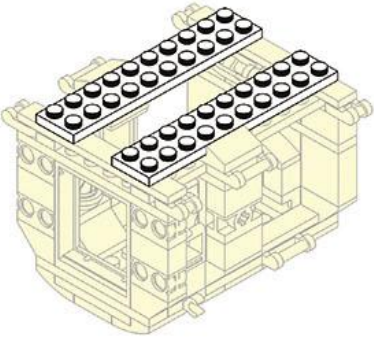

15

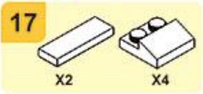

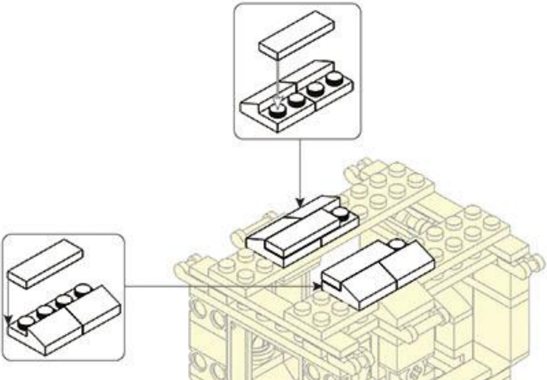

16

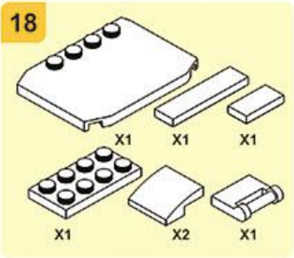
18
X1
X1
X1
X1
X2
X1

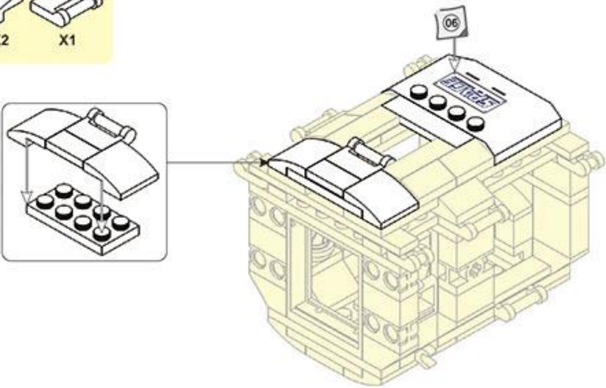

17

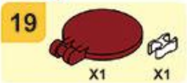

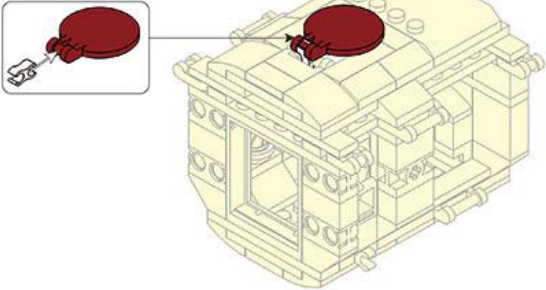

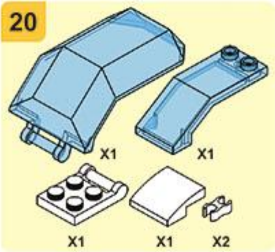
20
X1
X1
X1
X1
X2

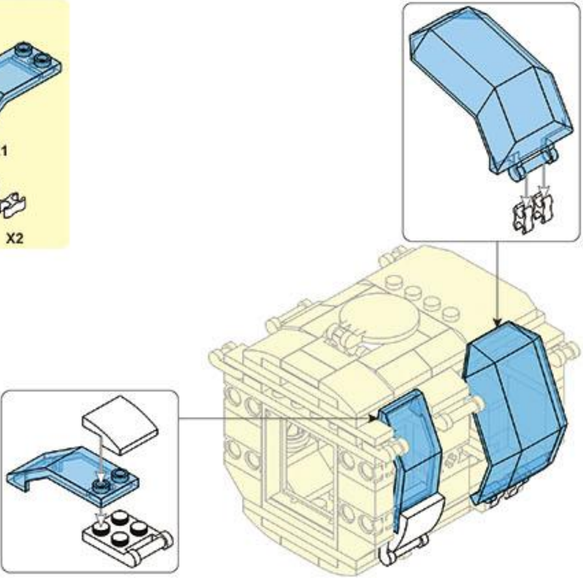

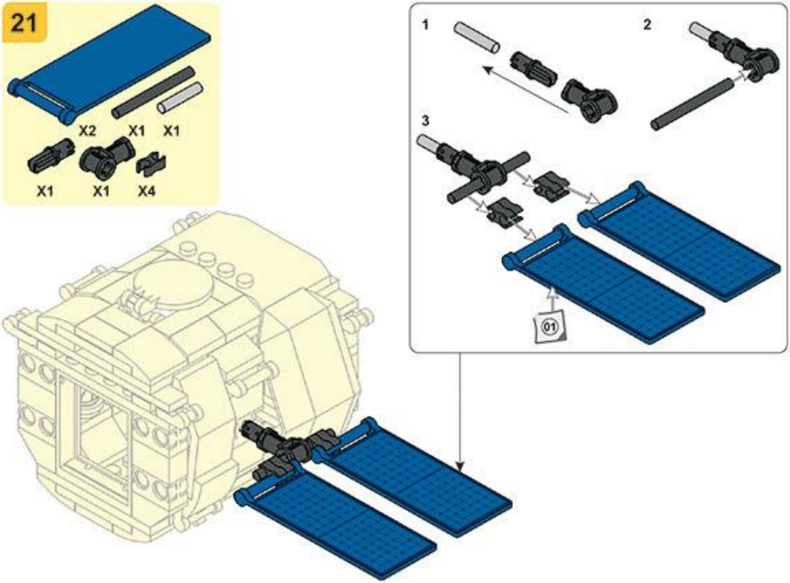
21
X2
X1
X1
X1
X1
X4
1
2
3
01

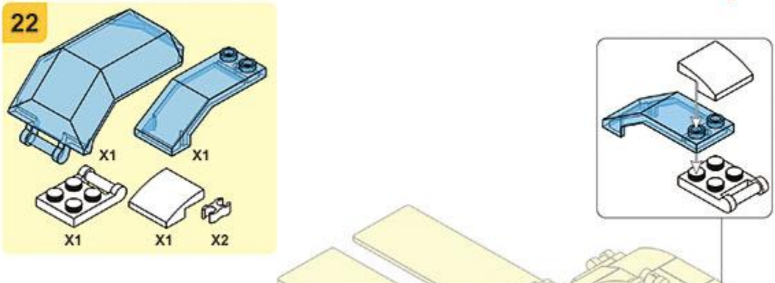
22
X1
X1
X1
X1
X2

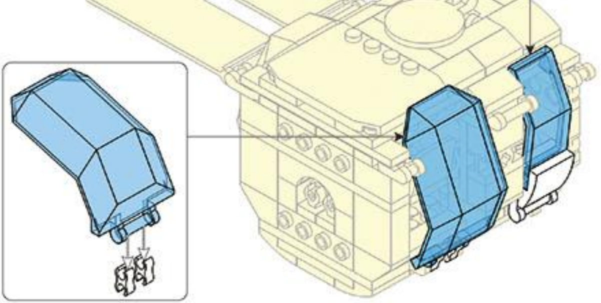

21

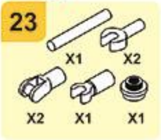
23
X1
X2
X2
X1
X1

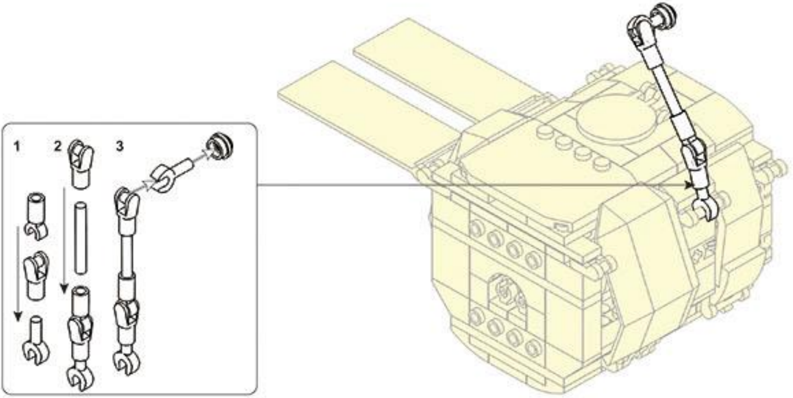

22

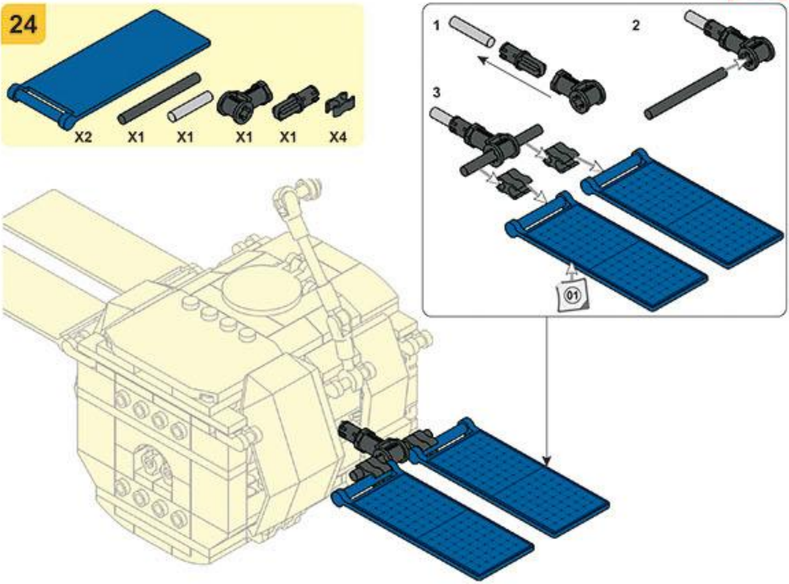
24
X2
X1
X1
X1
X1
X4
1
2
3
01

23

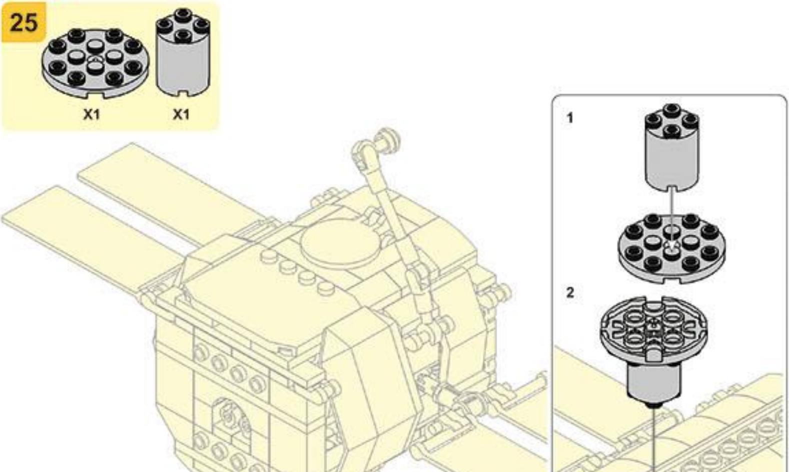

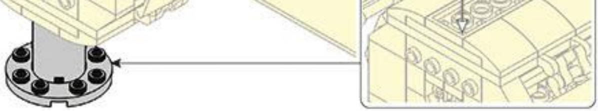

24

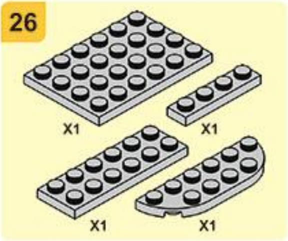
26
X1
X1
X1
X1

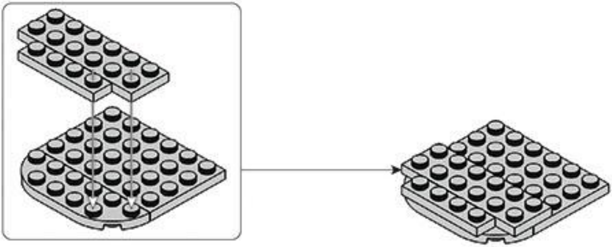

25

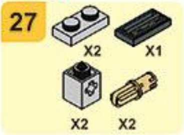
27
X2
X1
X2
X2

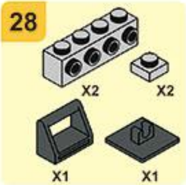
28
X2
X2
X1
X1

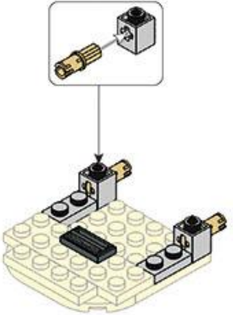

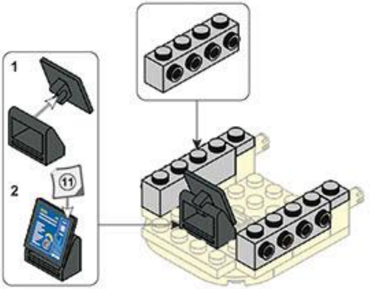

29

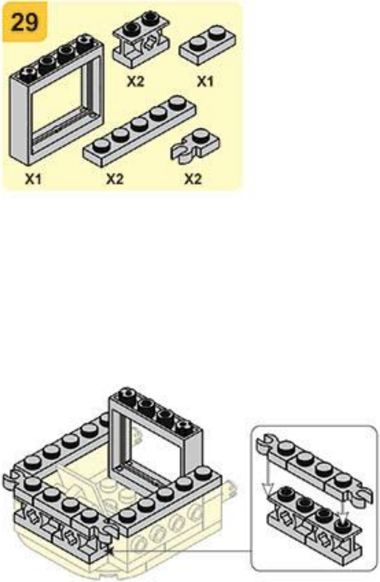
X2
X1
X1
X2
X2

30

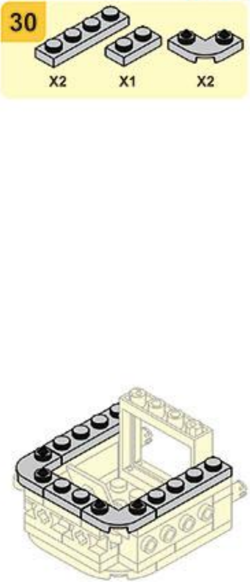

31

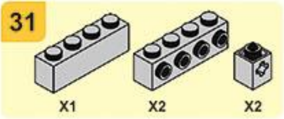

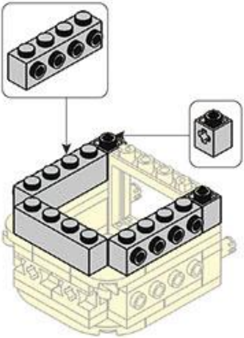

32

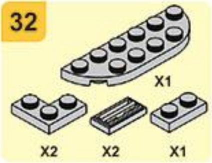

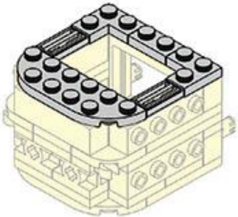

33

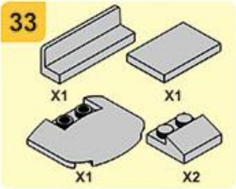

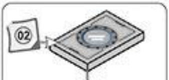

34

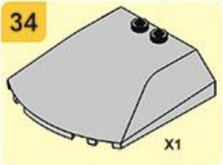

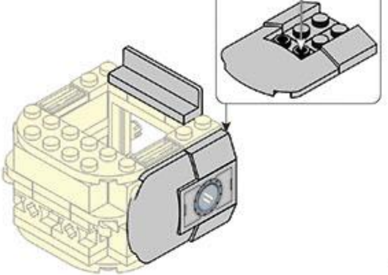

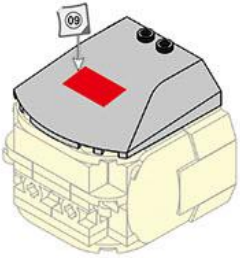

29

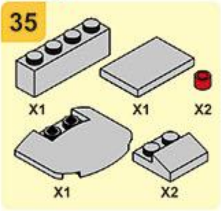
35
X1
X1
X2
X1
X2

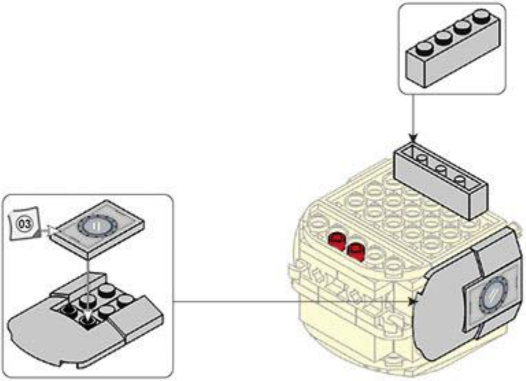

36

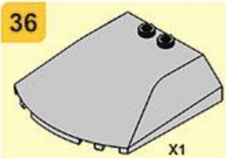

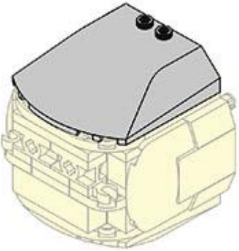

37

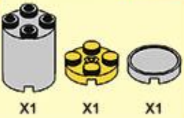

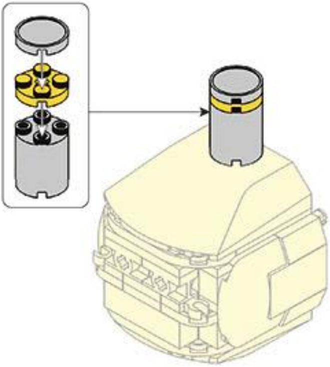

38

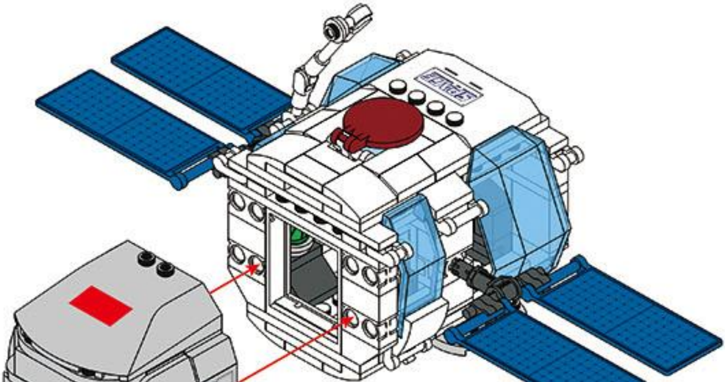

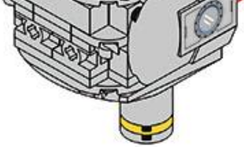

32

39

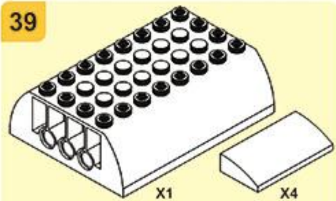

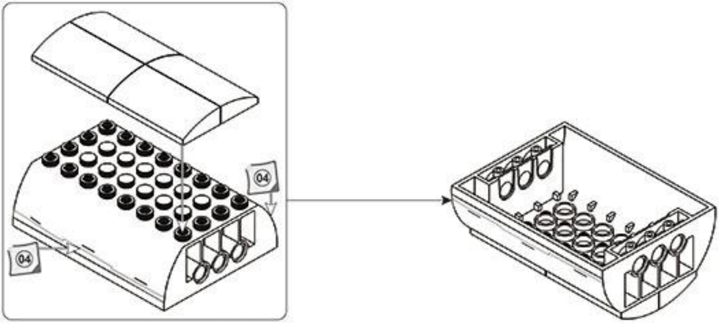

33

40

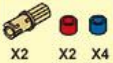

41

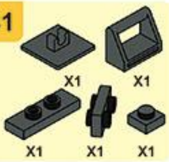
X1
X1
X1
X1
X1

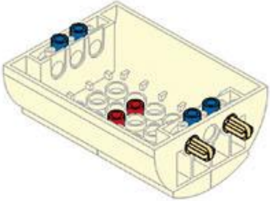

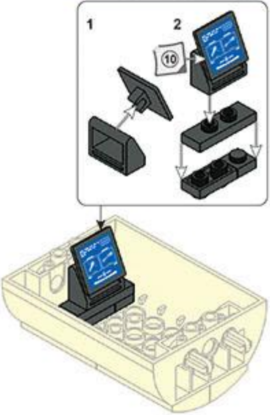

42

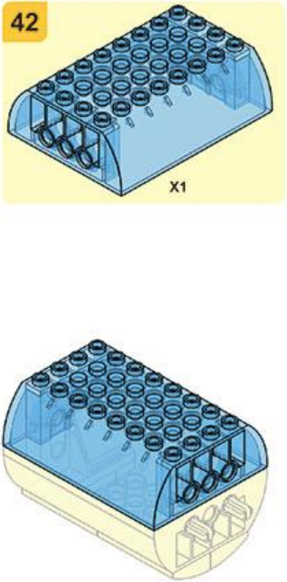

43

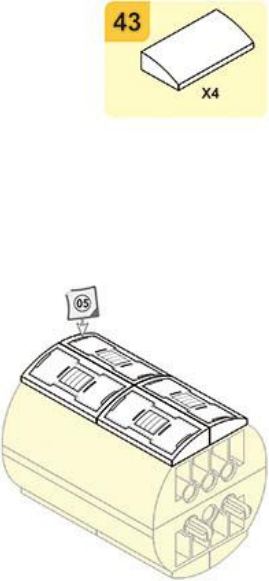

44

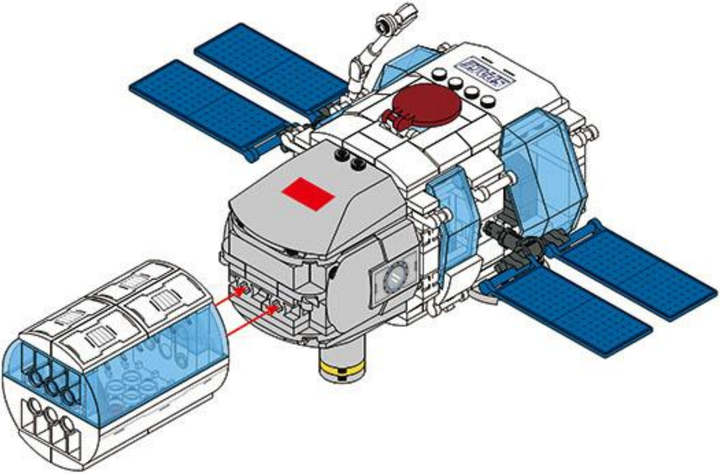

45

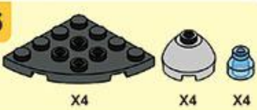

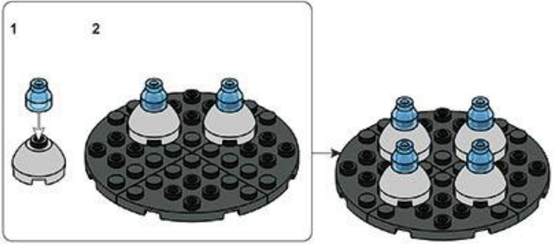

46

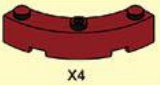

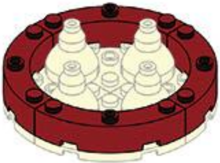

47

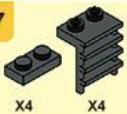

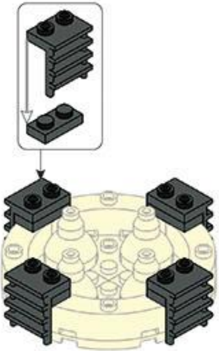

48

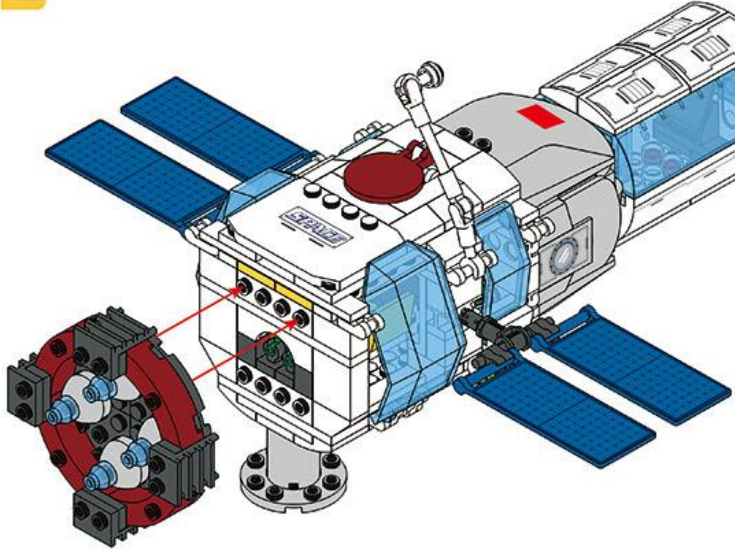

39

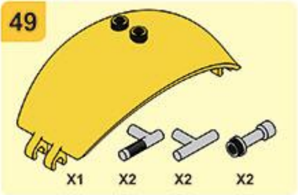
49
X1
X2
X2
X2

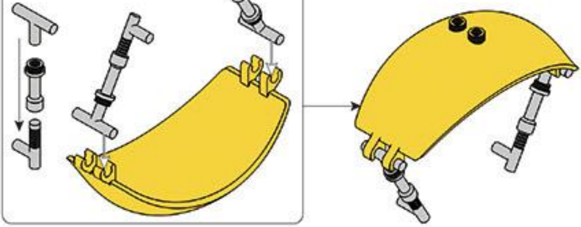

扫我，看故事

Scan me，Read Story

Просканируйте меня,
прочитайте рассказ

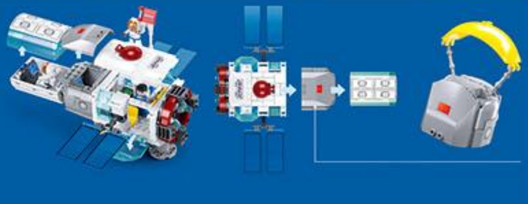

M38 - B1201

M38 - B1199

⚠ **WARNING:**

CHOKING HAZARD - Small parts.

Not for children under 3 years.